Water Research 154 (2019) 144–152

Contents lists available at ScienceDirect

Water Research

journal homepage: www.elsevier.com/locate/watres

•OH Inactivation of Cyanobacterial Blooms and Degradation of Toxins in Drinking Water Treatment System

Mindong Bai [a, *], Qilin Zheng [a], Wu Zheng [a], Haiyan Li [a], Shaoyun Lin [b], Lingfeng Huang [a], Zhitao Zhang [a]

[a] Key Laboratory of Ministry of Education for Coastal and Wetland Ecosystems, College of the Environment and Ecology, Fujian Collaborative Innovation Center for Exploitation, Utilization of Marine Biological Resources, Xiamen University, Xiamen, 361005, China
[b] Xiamen Water Group Co., Ltd, Xiamen, 361008, China

ARTICLE INFO

Article history:
Received 6 August 2018
Received in revised form
31 January 2019
Accepted 2 February 2019
Available online 5 February 2019

Keywords:
Cyanobacterial blooms
•OH pre-treatment
Cell integrity
DNA damage
•OH degradation
Microcystin-LR

ABSTRACT

Cyanobacterial blooms continue to serve as one of the most serious global issues threatening water supply and human health. During cyanobacterial bloom season, a large •OH-yield equipment was developed and installed after coagulation settling in a 12000 ton/day drinking water treatment system in Xiamen, China. An •OH concentration of 7.76~57.8 μmol/L was formed by using the oxygen activated species generated by strong ionisation discharge combining with the effect of water jet cavitation. •OH pre-treatment at a dose of 1.0 mg/L inactivated cyanobacterial blooms in the process of conveying bloom water within only 20s, which were then removed by sand filtration. Under SEM observation, dominant *Microcystis* sp. colonies connected by mucilage were dispersed into individuals that still retained the cell integrity, indicating no release of intracellular organic matter (IOM). According to a flow cytometry analysis, the main cause of •OH inactivation was the breakage of DNA strands. Meanwhile, the •OH-mineralized microcystin-LR was by breaking the C=C conjugated diene bond and crucial opening the persistent benzene ring to carboxylic acid m/z 158.0. During •OH pre-treatment of 1.0 mg/L and NaClO disinfection of 0.5 mg/L, all water quality indexes and disinfection by-product (DBP) contents complied with the Chinese Sanitary Standards for Drinking Water. Therefore, the •OH based on the strong ionisation discharge showed great prospect for large-scale drinking water treatment in the removal of cyanobacterial blooms while retaining cell integrity as well as the degradation of toxins.

© 2019 Elsevier Ltd. All rights reserved.

1. Introduction

Cyanobacterial blooms continue to serve as one of the most serious global issues threatening water resources due to the intensity of human activities that impact waterways and underlying climate change. These blooms can directly impact the quality of drinking water through the production of toxic metabolites, such as microcystin-LR, and through drastic changes in turbidity, pH, dissolved oxygen, and taste and odour, which pose a great challenge to drinking water production (He et al., 2016). A drinking water crisis followed a massive bloom of the toxin-producing cyanobacteria, *Microcystis aeruginosa*, in Lake Taihu, Wuxi, which is China's third-largest freshwater lake, leaving approximately two million people without drinking water for at least a week in late May 2007 (Zhang et al., 2010). Another serious bloom occurred in the Jiulong River watershed, which is the primary water source for 80% of the people in Xiamen, China, affecting 20 km of the watershed and lasting for a month in January 2009 (Li et al., 2011).

Conventional water treatment technologies, including coagulation, flocculation, and filtration, are inefficient for removing cyanobacterial blooms and dissolved toxin compounds. Common pre-treatment oxidants, including chlorine, potassium permanganate ($KMnO_4$), and ozone have often been used in conventional processes (Naceradska et al., 2017). Oxidation can alter the surface characteristics and charge of cyanobacteria, which then enhances the effectiveness of coagulation and flocculation for their subsequent removal (Fan et al., 2013). Removing intact cyanobacterial cells is the most effective way of minimising the risk due to the release of intracellular organic matter (IOM) (Wert et al., 2014). Nevertheless, exposure to low amounts of chlorine (<4.0~29 mg min/L) causes a loss in cell viability and corresponding

* Corresponding author.
E-mail address: mindong-bai@163.com (M. Bai).

https://doi.org/10.1016/j.watres.2019.02.002
0043-1354/© 2019 Elsevier Ltd. All rights reserved.

cyanotoxin release (Daly et al., 2007; Zamyadi et al., 2012a). The most notable disadvantage of the use of chlorine is that it can react with organics, forming by-products that are toxic to mammals, including carcinogenic trihalomethanes (THMs) (Svrcek and Smith, 2004). The action of $KMnO_4$ at concentrations of 3 mg/L for pre-oxidation did not compromise the integrity of membranes, but higher concentrations (5 and 10 mg/L) induced significant cyanobacterial cell lysis (Fan et al., 2013). The addition of $KMnO_4$ to the intake of water plants raises concerns about the accumulation of Mn and water colour (Naceradska et al., 2017; Qi et al., 2016). More than 1 mg/L of ozone could induce the release of algal toxins from ruptured cells directly to form chlorinated DBPs and high levels of bromates in subsequent Cl_2 disinfection units (Coral et al., 2013). Other oxidants may share similar trade-offs, which warrants a systematic study of whether they also cause cell lysis. In particular, studies are required on the concentrations of oxidants for effective pre-oxidation (Fan et al., 2013).

•OH-advanced oxidation processes (AOPs) such as ozone, hydrogen peroxide (H_2O_2) and UV photocatalyst are recognised as effective techniques as they readily oxidise cyanotoxin into non-toxic degradation products. The efficiency of both molecular and radical ozone for degrading cyanotoxins has been evaluated at laboratory scales using standard cyanotoxin concentrates spiked in buffered ultrapure or natural water (Al Momani and Jarrah, 2010). A laboratory photo-Fenton process with 20 mg/L H_2O_2 reduced microcystin-LR from a potable water source to below 1 μg/L after 20 min (Park et al., 2017). Photocatalyst under UV-A irradiation almost completely mineralized microcystin-LR after 48 h and cylindrospermopsin after 36 h in 5 mL solution based on TOC and inorganic ions (NO_2, NO_3, SO_4^{2} and NH_4^{+}) determinations, the conclusion that •OH attack is the main mechanism (Fotiou et al., 2015; Triantis et al., 2012). Moreover, Dionysiou group investigated the influence of variable amino acids of microcystins on the degradation kinetics and reaction mechanisms, which provides important scientific data for the treatment of cyanotoxin MCs by UV-AOPs (He et al., 2015).

The key to treating cyanobacterial blooms in drinking water systems is determining methods for inactivating algae blooms and degrading toxins while retaining cell integrity. During the bloom season at the Xiang'an drinking water treatment plant, Xiamen, China, large •OH-yield equipment was installed after coagulation settling in the 12000 ton/day treatment system. With strong ionisation discharge, oxygen activated species were injected into the gas/liquid injectors in the pipe and combined with the effects of water jet cavitation to produce •OH. The specific objectives of this study were to (1) demonstrate the effectiveness of •OH pre-treatment on algae colonies in natural bloom water; (2) analyse the cyanobacterial cell integrity and causes of •OH inactivation; (3) investigate the degradation of microcystin-LR; and (4) evaluate all water quality indexes and disinfection by-products (DBPs).

2. Materials and method

2.1. Water source and site description

The raw water of the Xiang'an Water Treatment Plant is obtained from the Jiulong River and Bantou Reservoir in Xiamen, China. The bloom season occurs from May to October every year. These water bodies serve as a potable water source for the surrounding municipalities, which have a population of 200000 people. The cyanobacteria bloom occurred in May 2017, and the total content was 17.9×10^4 cells/mL, which consisted of dominant *Microcystis* sp. colonies of 97.7%, a small number *Pseudanabaena* sp. of 0.96%, *Cyclotella* sp. of 0.45%, and other algae.

The main water quality indexes were as follows: water temperature, 26.5 °C; pH, 7.29; turbidity, 11.8 NTU; dissolved oxygen (DO), 6.02 mg/L; chemical oxygen demand (COD_{Mn}), 1.8 mg/L; total organic carbon (TOC), 2.42 mg/L; total phosphorus, 0.12 mg/L; total nitrogen, 2.16 mg/L; and ammonia (NH_3–N), 0.02 mg/L.

2.2. Procedure of •OH treatment of cyanobacterial blooms

A conventional drinking water treatment system is used in the Xiang'an Water Plant, including coagulation settling, sand filtration, NaClO disinfection, and clean water reservoirs, with a daily treatment process capacity of 12,000 ton/day. A •OH equipment was developed and installed in this system for the removal of cyanobacterial blooms and degradation of microcystin-LR as shown in Fig. 1, which consisted of 24 modules of plasma reactors in a parallel array and their corresponding power supplies, 5 gas/liquid injectors, 2 gas/liquid mixers, 3 filters, a pump, as well as a cooling water unit for the plasma reactors. The energy cost for a full scale treatment of 12,000 ton/day is 20 Wh/m^3.

In the coagulation sedimentation tank, approximately 80% of the blooms, colloid impurities, and suspended particles are removed by coagulation reactions with polymeric aluminum ferric chloride sulfate (PAFCS) and gravity settling, resulting in a reduction in the turbidity to 3.0~4.0 NTU.

For •OH pre-treatment, valve A was opened, and the cyanobacterial bloom water was transported along the green pipe at a flow rate of 500 m^3/h to the sand filtration tank. The produced •OH solution was injected into a liquid/liquid mixer to deactivate algae colonies and degrade toxins such as microcystin-LR. For NaClO pre-treatment, valve B was opened and the cyanobacterial bloom water was transported along the pink pipe, to which the NaClO solution was injected using a peristaltic pump. To compare the effects of

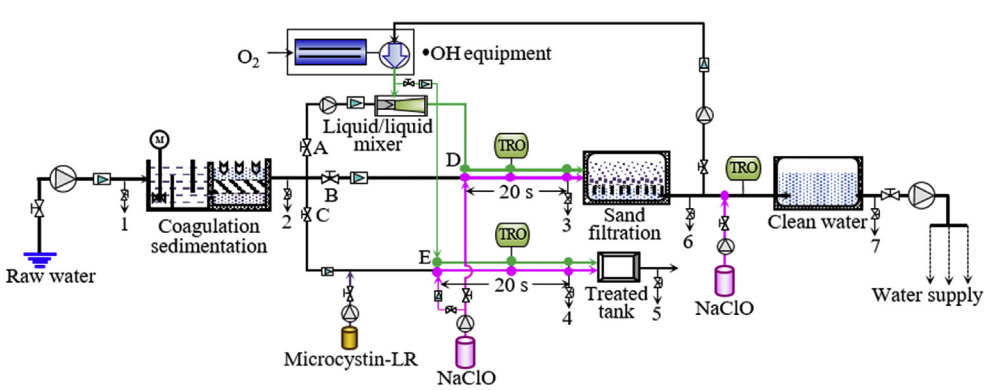

Fig. 1. •OH treatment of cyanobacterial blooms in the 12,000-ton/day drinking water system.

pre-treatment, the •OH and NaClO solutions were both injected at point D to flow into sample point 3 with a treatment time of 20 s. In the main pipe, all water samples were collected in 5 L glass vessels at points 1, 2, 3, 6 and 7.

To simulate the severe release of algal toxins, valve C was opened and bloom water was transported along the branch pipe at 1.0 m^3/h to the treatment tank with a volume of 1.0 m^3. The prepared microcystin-LR solution was injected into the branch pipe using a peristaltic pump. The •OH and NaClO solutions were both injected at point E and flowed to sample point 4 with a treatment time of 20 s. In the branch pipe, all water samples were collected in 1 L glass vessels at sample points 4 and 5.

In the sand filtration tank, dead algae cells, regarded as particles and suspended particles, were further removed by interception, gravity sedimentation, and physical adsorption, while most living algae cells could pass through sand filtration to the pipe network. Subsequently, NaClO disinfection was used to deactivate pathogenic microorganisms, such as bacteria, viruses, and protozoa, and to inhibit their regrowth in water supply networks. Finally, the purified water was stored in the clean water tank and then pumped to the pipe networks to serve as the drinking water supply.

2.3. •OH formation and measurement

With the strong ionisation discharge, oxygen activated species, including O_2^+, $O(^1D)$, O, O_2^-, $O_2(a^1\Delta_g)$, and O_3, were produced in plasma reactors and dissolved into some of the filtration water by gas/liquid injectors with a high mass-transfer efficiency of approximately 98%. In the pipe, water jet cavitation created numerous micro-bubbles and ultrasonic hydraulic shock waves (Zhang et al., 2018). The •OH were generated to a steady concentration at 1 s by the bursting of numerous bubbles as optimal chemical reaction conditions with a high temperature and pressure of approximately 3000 K and 10^5~10^6 Pa (Bai et al., 2016).

The •OH radicals in water underwent complicated chain reactions, resulting in their rapid conversion to other oxygen species, such as H_2O_2, HO_2^-, $O_2\bullet^-$, $O_3\bullet^-$, $HO_3\bullet$, and $O_2^+H_2O$, which are referred to as total reactive oxidants (TROs). The TRO calculated as Cl was measured on-line using a chlorine analyser (Hach CL17, USA), and adjusted following the colorimetric DPD (*N,N-diethyl-p-phenylenediamine*) method using a Bioquest CE2501 spectrophotometer (Cecil Instruments Ltd., UK) based on USEPA Method 330.5 (USEPA, 1978).

Using the 4-hydroxybenzoic acid (4-HBA) as a probe, the reaction with •OH can forms a hydroxylated derivative of 3,4-dihydroxybenzoic acid (3,4-DHBA), which was measured by a high-performance liquid chromatograph (HPLC, Agilent 1260, USA) equipped with a reversed-phase C18 column (Zorbax Eclipse XDB) and an ultraviolet detector at 210 nm. With the same water temperature and pH in the system (Fig. 1), the pure water or the pure water dissolved 4-HBA was pumped into a pipe, in which the same concentration of oxygen active species were injected into, for the measurement of TRO or •OH concentration, respectively. And the samples were collected in 200 mL glass vessels. As shown in Fig. 2 (a), two 3, 4-DHBA peaks were found to demonstrate the formation of •OH. The measured •OH concentrations reached 36.0 μM/L for a TRO of 11.4 mg/L and 57.8 μmol/L for a TRO of 14.2 mg/L. As shown in Fig. 2 (b), the relationship between •OH and TRO was linear with $R^2 = 0.9735$. When the TRO increased from 3.5 to 14.2 mg/L, •OH increased from 7.76 to 57.8 μmol/L.

2.4. Analysis methods

2.4.1. Analyses of cell integrity

The cells' surfaces were observed using a scanning electron microscope (SEM, SU-70, Hitachi, Japan). The observed samples were treated as follows: fixed in 2.5% glutaraldehyde for 18 h, concentrated by mesh sieves, dehydrated with increasing concentrations of ethanol (30, 50, 70, 80, 90, 100%), permeated with tert-butyl alcohol, and freeze-dried and gold-coated.

2.4.2. Detection of DNA damage

Damage to the DNA of algae was detected using a flow cytometer (Accuri C6, BD, USA) at an emitted light wavelength of 488 nm. TUNEL stain, terminal deoxynucleotidyl transferase-mediated dUTP nick-end labelling (Promega, USA), was used to mark the DNA strand fracture, which emits green fluorescence at a wavelength of 530 nm. The obtained data were analysed using FlowJo software.

2.4.3. Determination of microcystin-LR

Microcystin-LR was measured using a liquid chromatography-mass spectrometer LC/MS/MS (1260/6460, Agilent, USA) equipped with a reversed-phase C18 column. The collected samples were treated by solid-phase extraction. MS data were obtained under the positive ion mode by full scanning from m/z 200 to 1200. The small-molecule intermediates were detected using a gas chromatograph-mass spectrometer (GC/MS; 7890A, 5975C MSD, Agilent, USA) with a quartz capillary column.

2.4.4. DBPs measurements

ClO_2^-, ClO_3^-, and BrO_3^- were measured by ion chromatography

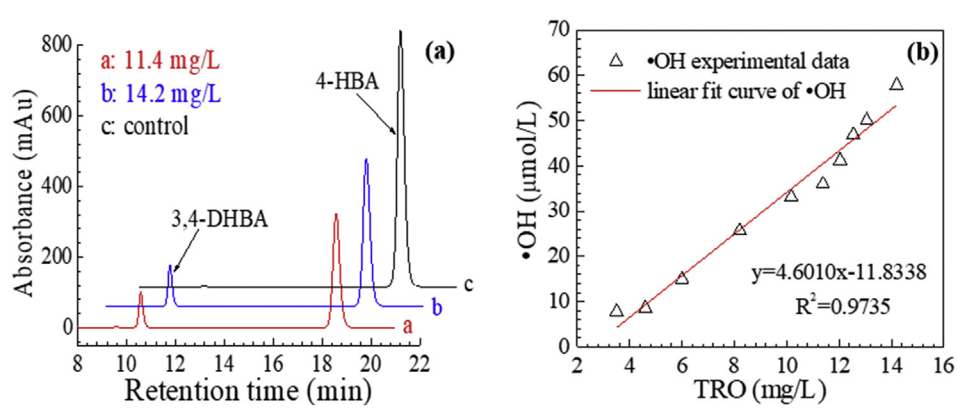

Fig. 2. (a) HPLC chromatogram of the measured •OH; (b) Relationship between TRO and •OH concentrations.
Note: 4-HBA in pure water; water temperature, 26.5 °C; pH, 7.29.

(Thermo 2100, USA) equipped with an AS11 anion-exchange chromatographic column (4 × 250 mm) and an AS19 anion-exchange chromatographic column (4 × 250 mm), according to USEPA Method 300.1 (USEPA, 1993). Haloalkanes, formaldehyde, and trichloroacetic aldehyde were detected using a GC/MS (QP2020Plus, Japan) equipped with a capillary column (HP-5MS, 30 m × 0.25 mm I.D., 0.2 μm film thickness, Agilent, USA) and electron capture detector, according to USEPA Methods 524.2 (USEPA, 1992) and 551.1(USEPA, 1995).

3. Results and discussion

3.1. Removal of cyanobacterial blooms by •OH pre-treatment

During cyanobacterial blooms, conventional drinking water treatment systems are inefficient for removing the high levels of cyanobacteria. Large •OH-yield equipment was installed after coagulation settling for the removal of blooms in a 12,000 ton/day drinking water treatment system, as shown in Fig. 1. The total cyanobacterial content of raw water was 17.9 × 10^4 cells/mL, which consisted of dominant *Microcystis* sp. of 17.5 × 10^4 cells/mL formed as colonies, *Pseudanabaena* sp. of 1730 cells/mL, *Cyclotella* sp. of 810 cells/mL, and other algae of 1230 cells/mL. Coagulation settling decreased the total algae content to 1.62 × 10^4 cells/mL, containing *Microcystis* sp. of 1.56 × 10^4 cells/mL, a small amount of *Pseudanabaena* sp. of 400 cells/mL, and other algae of 110 cells/mL.

The results of •OH/NaClO pre-treatment for cyanobacterial blooms are shown in Fig. 3, during which TRO was injected into the main pipe at 1.0 mg/L with a treatment time of 20 s. The numbers of viable or nonviable algae cells were determined using the SYTOX green stain (Life Technologies, USA). For •OH pre-treatment, no living algae cells were detected. For NaClO pre-treatment, there were 3780 cells/mL alive and 11,650 cells/mL dead algae with 20 s treated, and no living algae cells detected after 2 h. Consequently, dead algae cells considered as particles were captured by sand filtration, while the alive algae could transport through sand filtration to enter the clean water tank and ultimately the supply networks. In addition, the residual NaClO would receive a long time to react with algae, resulting in their death and a release of their metabolites, especial toxins, which would limit the safety of drinking water.

Microcystis form as colonies in natural water are more resistant to oxidation than unicellular algae. Chlorine of 2 and 5 mg/L were applied to cyanobacteria blooms with approximately 57 × 10^4 cells/mL from Missisquoi Bay, and reduced the total number of cells by 28~53% through full cell lysis (Zamyadi et al., 2012b). Chlorine of 1.0 mg/L treated the colonial *Microcystis aeruginosa* of 10 × 10^4 cells/mL in the size of 37~270 mm from a reservoir in Taiwan, and reduced the intact cells from 88% to 14% with the contact time of 10 min leading to a release of secondary metabolites in a laboratory (Fan et al., 2016). 20 mg/L H_2O_2 was used to inactivate natural *Microcystis* colonies of >100 μm collected from Taihu Lake, China, resulted that the chlorophyll-a was reduced to 13% of control level after 72 h exposure (Liu et al., 2017). 1.9 mg/min ozone with a gas flow of 0.5 L/min removed *Microcystis aeruginosa* by 35% rate within 10 min in 1.75 L water tank (Wu et al., 2012). However, the •OH-advanced oxidation based on strong ionisation discharge inactivated entire cyanobacterial blooms during drinking water treatment within only 20 s in the conventional 12,000 ton/day treatment system.

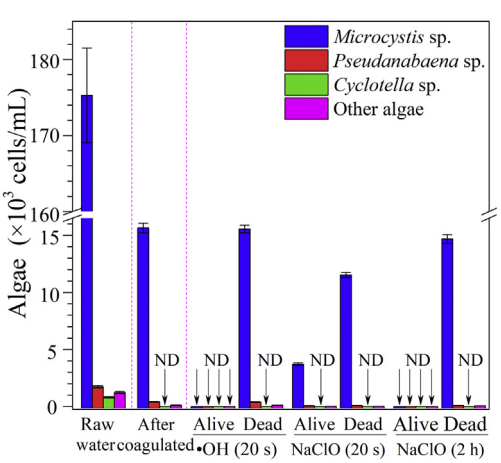

Fig. 3. Results of •OH/NaClO pre-treatment for cyanobacterial blooms in a 12,000 ton/day drinking water system.
Note: ND = not detected, •OH/NaClO dose TRO = 1.0 mg/L; water quality after coagulation settling, water temperature = 26.2 °C, pH = 7.18, turbidity = 2.08 NTU, TOC = 1.92 mg/L, COD_{Mn} = 1.1 mg/L, ammonia (NH_3–N) < 0.02 mg/L.

3.2. Analysis of algae cell integrity with •OH/NaClO inactivation

To estimate the cyanobacterial cell integrity upon •OH/NaClO inactivation, cell surface morphologies were observed using an SEM, as shown in Fig. 4(a and b). In the control sample, there was a clear *Microcystis* sp. colony with individual algal cells closely connected by mucilage, which had a diameter of 1~5 μm and a smooth spherical surface. In the •OH-treated sample (20 s), the algae colony was dispersed into individual cells that still retained their shape, indicating no release of IOM. Meanwhile, the mucilage, which is a slimy layer predominantly consisting of polysaccharides and protein, was degraded (Li et al., 2013). The cause of total algae death was the passage of •OH through the cell membrane to attack the purine and pyrimidine bases in the DNA, leading to nonselective DNA strand scission (Bohne et al., 2005).

For the NaClO-treated sample (20 s), a *Microcystis* sp colony connected by mucilage was present, but some individual algae cells (marked pink circles) were ruptured. For the NaClO-treated sample (2 h), a large number of algae in a *Microcystis* sp. colony connected by mucilage were deformed and ruptured, causing of death. The presence of mucilage indicated that NaClO cannot effectively degrade the mucilage matter. Unlike •OH, NaClO inactivation would cause extensive damage to the cell membrane (Ma et al., 2012) resulting in the release of IOM and the formation of DBPs.

3.3. DNA damage of algae cell with •OH/NaClO inactivation

To determine the cause of algae death, DNA damage of algae cells was analysed using a flow cytometer, and the results are shown in Fig. 5. The broken DNA strand labelled with TUNEL staining could emit a stronger green fluorescence. In the control figure, the red line at the $10^{4.1}$ position on the x-axis was used to distinguish between weaker and stronger green fluorescence. The left side in red line indicated a region with intact DNA, and the right side indicated a region with broken DNA. Approximately 10.20% of algae had broken DNA strands, even though all algae were living.

In the •OH-treated sample (20 s) that all algae had died, the fluorescence peak shifted to the right at 10^3~10^6, and 94.22% algal cells were identified to have broken DNA strands. The main reason that the •OH caused algae death was the breakage of DNA strand, which could impede the synthesis of proteins and evoke a complex caspase 3 or 7 signal pathway (Roos et al., 2016).

In the NaClO-treated sample (20 s), the position of fluorescence peak was no different to that of the control sample. There was almost no change in the level of intact and broken DNA strands, even though 75.50% algae cells had died. In the NaClO-treated

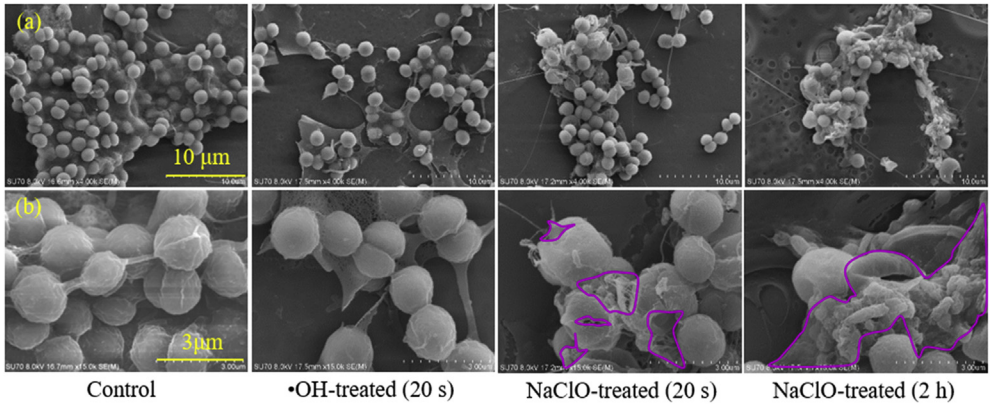

Fig. 4. SEM images of cyanobacterial cell surface morphologies with •OH/NaClO inactivation.
(a) SEM images with magnification of 4000×; (b) SEM images with magnification of 15000×; original total algae = 16,150 cells/mL; inactivated dose TRO = 1.0 mg/L; control sample = all living cells; •OH-treated sample (20 s) = no alive algae; NaClO-treated sample (20 s) = 24.5% living algae; NaClO-treated sample (2 h)=no alive algae.

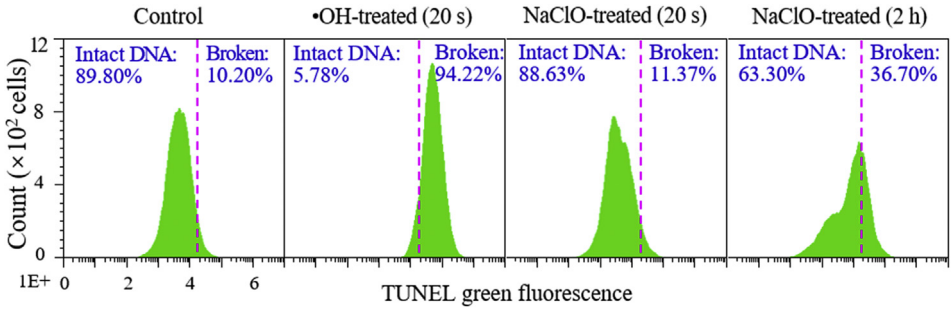

Fig. 5. Flow cytometry results of DNA strand damage with •OH/NaClO inactivation.
Note: original total algae = 16,150 cells/mL; TRO = 1.0 mg/L; control sample = all living algae; •OH-treated (20 s) sample = no living algae; NaClO-treated (20 s) sample = 24.5% living algae; NaClO-treated (2 h) sample = no living algae.

sample (2 h), the fluorescence peak slightly moved to the right, and 36.70% algae were confirmed to have broken DNA strands, even though all cells were dead. The main cause of algae death by NaClO was not DNA strand damage, but algal cell rupture (Dai et al., 2016; Ou et al., 2011). Therefore, NaClO pre-treatment for cyanobacterial blooms in a drinking water system could cause the release of intracellular substances, especially algal toxins and odours, which could reduce drinking water safety.

3.4. •OH degradation of microcystin-LR

Whether pre-oxidation with a strong oxidant would induce the lysis of algal cells and release of intracellular algal toxins is of great concern. To simulate severe toxin release by cyanobacterial blooms, 1.0 m^3/h of bloom water was separated to the branch pipe after coagulation settling, where the prepared microcystin-LR was injected to reach a concentration of 10.4 μg/L. The HPLC chromatogram of microcystin-LR by •OH/NaClO degradation is shown in Fig. 6 (a), in which 1.0 mg/L of TRO was injected into the branch pipe with a treated time of 20 s. The •OH completely degraded the microcystin-LR from 10.4 μg/L to ND, while the NaClO decreased the level of microcystin-LR to 9.9 μg/L, achieving a degradation rate of 4.81%.

To verify the •OH degradation of microcystin-LR, TRO was injected into the branch pipe at 2 and 4.5 mg/L to degrade 1 mg/L of microcystin-LR, and water samples were collected after a treated time of 6 s. The total ion current chromatogram for the •OH degradation of microcystin- LR is shown in Fig. 6 (b). In the control sample, a microcystin-LR peak was clearly identified. When 2 mg/L of TRO was injected, the microcystin-LR peak disappeared and five new peaks (M1~M5) were detected. Based on the MS/MS analyses of the structural formulas of the molecular fragments and previous studies, M1, m/z 795.4; M2, m/z 835.4; M3, m/z 815.3; M4, m/z 232.1; and M5, m/z 158.0 are presented in Fig. 6 (b). With the injection of 4.5 mg/L of TRO, no peaks were detected to fit with the basic line, indicating that intermediates M1~M5 were completely degraded.

Microcystin-LR is a monocyclic heptapeptide composed of seven amino acids and a side chain, which can stably exist for at least several weeks in natural waters (Botes et al., 1985). The •OH degraded the microcystin-LR through the dihydroxylation and hydroxyl substitution of the C=C in the Adda group to produce ketoenol tautomers, such as those at m/z 795.4, m/z 835.4, and m/z 815.3, which were further oxidised into amino acid compounds with smaller molecules (Andersen et al., 2014; Chang et al., 2014). In addition, the •OH attacked the m/z 232.1 to form hydroxyphenylic compound and crucially to open its persistent benzene ring to carboxylic acid m/z 158.0 for the mineralization of microcystin-LR (Moon et al., 2017). Likewise, Dionysiou group have confirmed that •OH in UV-AOPs completely mineralized microcystin-LR (Triantis et al., 2012).

Other degradation methods, such as chlorine dioxide, bimetallic nanoparticles, and the photo-Fenton process, have also been reported to remove microcystin-LR. Chlorine can oxidise dissolved 53 μg/L microcystins efficiently if a sufficient amount of residual chlorine (3~5 mg/L) and contact time (1~60 min) are applied (Fan et al., 2014). An aqueous HClO dosage of 2 mg/L degraded 50 μg/L microcystin-LR to 1 μg/L within 40 min, but the formation of toxic

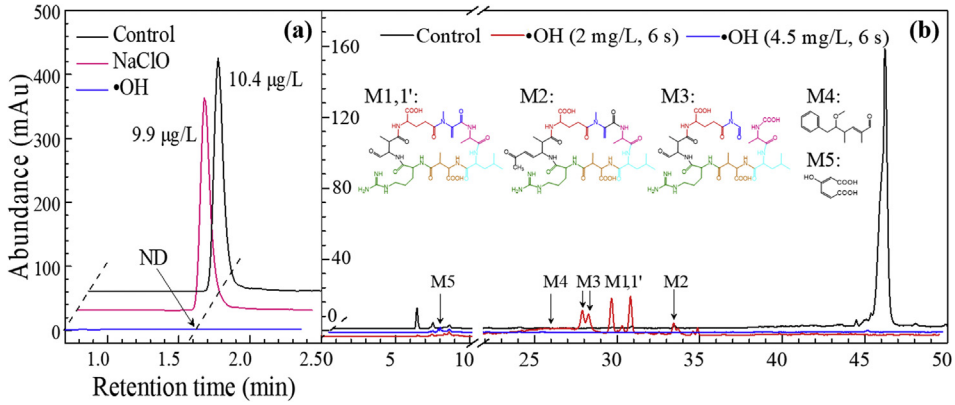

Fig. 6. HPLC chromatogram of Microcystin LR degradation.
Note: (a) Microcystin LR = 10.4 μg/L; TRO = 1.0 mg/L; treated time = 20 s; results were obtained in a 12,000-ton/day drinking water system; (b) Microcystin LR = 1 mg/L; TRO = 2.0, 4.5 mg/L; treated time = 6 s; intermediate products M1: m/z 795.4, M2: m/z 835.4, M3: m/z 815.3, M4: m/z 232.1, and M5: m/z 158.0; results were achieved a laboratory experiment. ND = not detected.

chlorination by-products can be an issue (Zong et al., 2013). Chlorine dioxide achieved no significant removal of a prepared microcystin-LR in deionised water at 240 mg min/L (Ding et al., 2010). Both Fe/Ni and Fe/Pd nanoparticles based on nanoscale zero-valent iron removed approximately 90% microcystin-LR after 120 min in a laboratory experiment (Gao et al., 2016). UV/chlorine (1.5 mg/L) achieved a complete removal of 1 mg/L MC-LR after 16 min in 10 mL deionised water, and the contribution of •OH was 39% more than that of 8% UV, 27% Cl_2 and 26% reactive chlorine species, respectively (Duan et al., 2018). In this study, the •OH produced by the strong ionisation discharge degraded whole microcystin-LR within 20 s. This is because •OH has a greater oxidation potential ($E^0 = 2.8$ V) and chemical reaction rate (10^8~10^9 $M^{-1}s^{-1}$) than those of chlorine ($E^0 = 1.63$ V, approximately 10^{-1} $M^{-1}s^{-1}$, respectively) (Mahamuni and Adewuyi, 2010). Therefore, the •OH advanced oxidation exhibits a great potential in the degradation of algal toxins during the removal of cyanobacterial blooms for large-scale industrial application.

3.5. NaClO disinfection in the drinking water system

Cyanobacterial blooms in water sources, such as rivers, lakes, and reservoirs, may cause drastic changes in turbidity, pH, taste, and odour, which pose a great challenge to drinking water production. In the Xiang'an Drinking Water Treatment Plant, NaClO was used for the disinfection of pathogenic microorganisms and generated residual disinfectant to prevent microbial regrowth in the water distribution system. Following the Chinese Sanitary Standards for Drinking Water (GB5749-2006), 106 drinking water quality indexes were detected by the Xiamen Monitoring Station of the Chinese Urban Water Supply, in Xiamen of China, which had the qualification certification of China Inspection Body and Laboratory Mandatory Approval (CMA). Main indexes are shown in supporting Table S1.

The pH value of raw water was 7.29 due to the high algae content of 17.9×10^4 cells/mL, which was reduced to 7.19 after sand filtration due to the •OH pre-treatment of algae colonies. Accordingly, the turbidity of raw water (11.8 NTU) was decreased to 0.18 NTU after sand filtration. During the whole treatment process, no taste or odour were detected, and the levels of colour, conductivity, and visible organisms did not change. The COD_{Mn}, TOC, and NH_3–N decreased to 1.0, 1.74, and <0.02 mg/L, respectively. During coagulation sedimentation and sand filtration, pathogenic microorganism indexes, such as heterotrophic plate counts, total coliform bacteria, *Escherichia coli*, and thermotolerant coliform bacteria were decreased to 57 CFU/mL, ND, ND, and ND, respectively. After disinfection with 0.5 mg/L of NaClO, the total colonies were decreased to ND. In addition, the levels of NO_2^-, NO_3^-, SO_4^{2-}, Cl^-, F^-, and S^- barely changed, and the levels of Al, Fe, Mn, Zn, and As also did not change.

Both volatile phenols and linear alkylbenzene sulphonate (LAS) are widespread global aquatic pollutants. Volatile phenols can cause harmful effects on the central nervous system, heart, lungs, and kidneys (Zhang et al., 2012), while LAS might induce genotoxic manifestations by adversely affecting the integrity of DNA (Shukla and Trivedi, 2018). After disinfection with 0.5 mg/L of NaClO, the levels of both volatile phenols and LAS were below the limit set by GB5749-2006 of China (China, 2006). The biological toxicity was measured using *Photobacterium phosphoreum T3 spp.* as an indicator organism following Chinese standard methods (China, 1995), which represent the acute toxicity of water. The result below zero indicated the safety of the drinking water treated by this process.

Overall, during the •OH pre-treatment (1.0 mg/L) and NaClO disinfection (0.5 mg/L) of cyanobacterial blooms, all 106 drinking water quality indexes complied with Chinese Sanitary Standards for Drinking Water GB5749-2006, (China, 2006).

3.6. DBPs by NaClO disinfection

The pre-oxidation of cyanobacterial blooms releases intracellular compounds that may contribute to the pool of chlorinated DBP precursors, assuming that post-chlorination is used as a final disinfection process (Coral et al., 2013). The most notable disadvantage of the use of chlorine is that it can react with organics to form by-products that are toxic to mammals (Svrcek and Smith, 2004), including carcinogenic THMs. Therefore, the possible DBP of •OH pre-treatment and NaClO disinfection needs to be analysed based on the China National Standards for Drinking Water Quality (GB5749-2006) (China, 2006) in the 12000 ton/day drinking water treatment system.

Cl^- content of 6.91 mg/L and Br^- content of 0.02 mg/L were detected in the raw water. The DBP data for NaClO disinfection at a dosage of 0.5 mg/L are shown in Table 1. Bromate (BrO_3^-) is a potential carcinogen, and its limit in drinking water is below 10 μg/L according to the World Health Organisation (WHO), the Environmental Protection Agency (EPA), and GB5749-2006 of China. During •OH pre-treatment, BrO_3^- was not detected after NaClO disinfection, while quantities of 2.6~46 μg/L were observed by Werschkun

Table 1
Formation of DBPs during NaClO disinfection.

DBPs	Detection limit	Raw water	After sand filtration		GB5749-2006 limit values (China, 2006)
			Control	NaClO disinfection 0.5 mg/L	
Chlorite (ClO_2^-, μg/L)	12	<12.0	<12.0	<12.0	≤700.0
Chlorate (ClO_3^-, μg/L)	12	<12.0	<12.0	14.0	≤700.0
Bromate (BrO_3^-, μg/L)	8	<8.0	<8.0	<8.0	≤10.0
Formaldehyde (HCHO, μg/L)	50	<50.0	<50.0	<50.0	≤900.0
Chloral (CCl_3CHO, μg/L)	1.6	<1.6	<1.6	4.2 ± 1.6	≤10.0
Trichloromethane (TCM, μg/L)	0.4	<0.4	<0.4	5.4 ± 0.5	≤60.0
Dibromochloromethane (DBCM, μg/L)	0.4	<0.4	<0.4	2.0 ± 0.4	≤100.0
Bromodichloromethane (DCBM, μg/L)	0.3	<0.3	<0.3	4.4 ± 0.3	≤60.0
Tribromomethane (TBM, μg/L)	0.5	<0.5	<0.5	<0.5	≤100.0
Trihalomethanes (THMs, μg/L)	20	<20.0	<20.0	190.0 ± 22	≤1000.0
Dichloromethane (DCM, μg/L)	0.4	<0.4	<0.4	<0.4	≤20.0
1,2-Dichloroethane (DCE, μg/L)	0.6	<0.6	<0.6	<0.6	≤30.0
1,1,1-Trichloroethane (1,1,1-TCA, μg/L)	0.6	<0.6	<0.6	<0.6	≤2000.0
Dichloroacetic acid (DCAA, μg/L)	5.0	<5.0	<5.0	<5.0	≤50.0
Trichloroacetic acid (TCAA, μg/L)	6.0	<6.0	<6.0	<6.0	≤100.0
2,4,6-Trichlorophenol (2,4,6-TCP, μg/L)	0.9	1.1 ± 0.9	<0.9	<0.9	≤200.0

Note: GB5749-2006, China National Standards for drinking water quality.

(Werschkun et al., 2012). Meanwhile, there was no change in the level of chlorite (ClO_2^-), while the level of chlorate (ClO_3^-) slightly increased to 14 μg/L, which is much lower than the limit of 700 μg/L set by GB5749-2006. Moreover, methane was not detected, while the level of chloral increased to 4.2 μg/L, which is lower than the 10 μg/L set by GB5749-2006.

HAAs, which could increase the risk of cancer, were analysed in this study. No DCAA or TCAA was detected after NaClO disinfection. Xue et al. found that the levels of DCAA and TCAA were 14.79 and 22.45 μg/L respectively, with a free chlorine dosage of 6 mg/L after disinfection for 4 h (Xue et al., 2017).

THMs have been demonstrated to act as strong carcinogens and mutagens to humans, and are also intermediates to other DBPs (Bai et al., 2018; Szczuka et al., 2017). After NaClO disinfection, the TCM, DBCM, and DCBM contents were slightly increased to 5.4 μg/L, 2.0 μg/L, and 4.4 μg/L, respectively, which were much lower than the limits of 60 μg/L, 100 μg/L, and 60 μg/L set by GB5749-2006. Furthermore, no TBM, DCM, and DCE were detected. However, the THMs content reached 190 μg/L, which is much lower than the 1000 μg/L set by GB5749-2006, but 2.4 times that of the 80 μg/L regulated by the EPA Drinking Water Standards and Health Advisories. Hua (Hua and Reckhow, 2007) reported that the levels of THMs were 110–240 μg/L in different natural surface waters with a Cl_2 dosage of 0.5 mg/L and disinfection for 48 h.

In summary, during the •OH pre-treatment and NaClO disinfection of cyanobacterial blooms at a capacity of 12,000 ton/day, the total DBP contents were much lower than Chinese Sanitary Standards for Drinking Water GB5749-2006.

4. Conclusions

During the bloom season at Xiang'an Drinking Water Treatment Plant, Xiamen, China, a large •OH-yield equipment, which oxygen-activated species generated by the strong ionisation discharge were combined with the effect of water jet cavitation to form •OH at a concentration of 7.76~57.8 μmol/L, was developed and installed after coagulation settling in a 12000 ton/day treatment system. With Compared to common pre-treatment oxidants, the •OH technology exhibited great potential for large-scale drinking water treatment in the removal of cyanobacterial blooms while retaining cell integrity as well as the degradation of toxins. The main results are as follows:

1) For •OH pre-treatment at a dose of 1.0 mg/L, the cyanobacterial blooms were inactivated during the process of conveying bloom water within 20 s, and then removed by sand filtration. For NaClO pre-treatment, 3780 cells/mL of living algae persistent, which could transport through sand filtration and enter supply networks, reducing the safety of drinking water.
2) According to the observation of cyanobacterial cell integrity by SEM, for •OH inactivation, the dominant *Microcystis* sp colonies connected by mucilage were dispersed into individuals that retained their shape, indicating no release of IOM. For 2 h of NaClO inactivation, algae cells were still connected by mucilage, but many were deformed and ruptured.

According to the analyses of DNA damage using a flow cytometer, with •OH inactivation, 94.22% of algal cells were identified to have broken DNA strands. However, with NaClO inactivation treated for 2 h, only 36.70% algae were identified to have broken DNA strands. Therefore, the main cause of inactivation by •OH was the breakage of the DNA strand, while by NaClO was the extensive destruction of cell membranes, resulting in the release of intracellular algal toxins.

3) Whether •OH or NaClO pre-treatment would induce the release of intracellular algal toxins is of great concern. When 1.0 mg/L of TRO was injected into the branch pipe at a treatment time of 20 s, the •OH degraded the levels of microcystin-LR from 10.4 μg/L to ND, while NaClO decreased the level to 9.9 μg/L. It was also determined whether •OH or NaClO could break the microcystin-LR at conjugated C=C diene bond to form a cyclic peptide and persistent benzene product, but only •OH opened the benzene ring to carboxylic acid m/z 158.0 for its mineralization.
4) During the •OH pre-treatment of 1.0 mg/L and NaClO disinfection of 0.5 mg/L, all drinking water quality indexes and DBP contents complied with the Chinese Sanitary Standards for Drinking Water (GB5749, China, 2006), suggesting that the drinking water posed no risk to human health safety.

Conflicts of interest

We declare that we have no financial and personal relationships with other people or organizations that can inappropriately

influence our work, there is no professional or other personal interest of any nature or kind in any product, service and/or company that could be construed as influencing the position presented in, or the review of, the manuscript entitled "•OH Inactivation of Cyanobacterial Blooms and Degradation of Toxins in Drinking Water Treatment System".

Notes

The authors declare no competing financial interest.

Acknowledgments

This work was supported by the Major Scientific Instrument Development Project from National Natural Science Foundation of China (NSFC: 61427804), Innovation Team for Innovative Talent Promotion Plan from Ministry of Science and Technology of China (No. 2015RA4008). National Science and Technology Support Program from Ministry of Science and Technology of China (No. 2013BAC06B01, 2013BAC06B02).

Appendix A. Supplementary data

Supplementary data to this article can be found online at https://doi.org/10.1016/j.watres.2019.02.002.

References

Al Momani, F.A., Jarrah, N., 2010. Treatment and kinetic study of cyanobacterial toxin by ozone. J. Environ. Sci. Health - Part A Toxic/Hazard. Subst. Environ. Eng. 45 (6), 719–731.
Andersen, J., Han, C., O'Shea, K., Dionysiou, D.D., 2014. Revealing the degradation intermediates and pathways of visible light-induced NF-TiO2 photocatalysis of microcystin-LR. Appl. Catal. B Environ. 154, 259–266.
Bai, M., Zheng, Q., Tian, Y., Zhang, Z., Cao, C., Chao, C., Meng, X., 2016. Inactivation of invasive marine species in the process of conveying ballast water using OH based on a strong ionization discharge. Water Res. 96, 217–224.
Bai, M., Zheng, W., Huang, X., Wang, Y., Li, H., Zhang, Z., 2018. Studies on the ·OH inactivation of non-native aquatic organisms and potential disinfection byproduct formation for oceanic environmental safety. Plasma Chem. Plasma Process. 38 (5), 1051–1062.
Bohne, C., Faulhaber, K., Giese, B., Hafner, A., Hofmann, A., Ihmels, H., Kohler, A.K., Pera, S., Schneider, F., Sheepwash, M.A.L., 2005. Studies on the mechanism of the photo-induced DNA damage in the presence of acridizinium salts - involvement of singlet oxygen and an unusual source for hydroxyl radicals. J. Am. Chem. Soc. 127 (1), 76–85.
Botes, D.P., Wessels, P.L., Kruger, H., Runnegar, M.T.C., Santikarn, S., Smith, R.J., Barna, J.C.J., Williams, D.H., 1985. Structural studies on cyanoginosins-LR, cyanoginosins-YR, cyanoginosins-YA and cyanoginosins-YM, peptide toxins from Microcystis aeruginosa. Journal of the Chemical Society-Perkin Transactions 1 (12), 2747–2748.
Chang, J., Chen, Z.L., Wang, Z., Shen, J.M., Chen, Q., Kang, J., Yang, L., Liu, X.W., Nie, C.X., 2014. Ozonation degradation of microcystin-LR in aqueous solution: intermediates, byproducts and pathways. Water Res. 63, 52–61.
China, 1995. Water Quality-Determination of the Acrute Toxicity-Luminescent Bacteria Test (GB 15441-1995) National Healthe Commission of the People's republic of China. China National Standardization Management Committee.
China, 2006. Standards for Drinking Water Quality (GB 5749-2006) National Healthe Commission of the People's republic of China. China national standardization management committee.
Coral, L.A., Zamyadi, A., Barbeau, B., Bassetti, F.J., Lapolli, F.R., Prevost, M., 2013. Oxidation of Microcystis aeruginosa and Anabaena flos-aquae by ozone: impacts on cell integrity and chlorination by-product formation. Water Res. 47 (9), 2983–2994.
Dai, H.B., Xu, J.Y., Chen, Z., Yang, C.H., Hong, W.C., Man, H.L., 2016. Chlorination of Microcystis aeruginosa: cell lyses and incomplete degradation of bioorganic substance. Desalination and Water Treatment 57 (34), 16129–16137.
Daly, R.I., Ho, L., Brookes, J.D., 2007. Effect of chlorination on Microcystis aeruginosa cell integrity and subsequent microcystin release and degradation. Environ. Sci. Technol. 41 (12), 4447–4453.
Ding, J., Shi, H.L., Timmons, T., Adams, C., 2010. Release and removal of microcystins from microcystis during oxidative-, physical-, and UV-based disinfection. Journal of Environmental Engineering-Asce 136 (1), 2–11.
Duan, X.D., Sanan, T., de la Cruz, A., He, X.X., Kong, M.H., Dionysiou, D.D., 2018. Susceptibility of the algal toxin microcystin-LR to UV/chlorine process: comparison with chlorination. Environ. Sci. Technol. 52 (15), 8252–8262.
Fan, J., Ho, L., Hobson, P., Brookes, J., 2013. Evaluating the effectiveness of copper sulphate, chlorine, potassium permanganate, hydrogen peroxide and ozone on cyanobacterial cell integrity. Water Res. 47 (14), 5153–5164.
Fan, J.J., Hobson, P., Ho, L., Daly, R., Brookes, J., 2014. The effects of various control and water treatment processes on the membrane integrity and toxin fate of cyanobacteria. J. Hazard Mater. 264, 313–322.
Fan, J.J., Rao, L., Chiu, Y.T., Lin, T.F., 2016. Impact of chlorine on the cell integrity and toxin release and degradation of colonial Microcystis. Water Res. 102, 394–404.
Fotiou, T., Triantis, T., Kaloudis, T., Hiskia, A., 2015. Photocatalytic degradation of cylindrospermopsin under UV-A, solar and visible light using TiO2. Mineralization and intermediate products. Chemosphere 119, S89–S94.
Gao, Y., Wang, F.F., Wu, Y., Naidu, R., Chen, Z.L., 2016. Comparison of degradation mechanisms of microcystin-LR using nanoscale zero-valent iron (nZVI) and bimetallic Fe/Ni and Fe/Pd nanoparticles. Chem. Eng. J. 285, 459–466.
He, X.X., de la Cruz, A.A., Hiskia, A., Kaloudis, T., O'Shea, K., Dionysiou, D.D., 2015. Destruction of microcystins (cyanotoxins) by UV-254 nm-based direct photolysis and advanced oxidation processes (AOPs): influence of variable amino acids on the degradation kinetics and reaction mechanisms. Water Res. 74, 227–238.
He, X.X., Liu, Y.L., Conklin, A., Westrick, J., Weavers, L.K., Dionysiou, D.D., Lenhart, J.J., Mouser, P.J., Szlag, D., Walker, H.W., 2016. Toxic cyanobacteria and drinking water: impacts, detection, and treatment. Harmful Algae 54, 174–193.
Hua, G.H., Reckhow, D.A., 2007. Comparison of disinfection byproduct formation from chlorine and alternative disinfectants. Water Res. 41 (8), 1667–1678.
Li, M., Zhu, W., Gao, L., Lu, L., 2013. Changes in extracellular polysaccharide content and morphology of Microcystis aeruginosa at different specific growth rates. J. Appl. Phycol. 25 (4), 1023–1030.
Li, Y., Cao, W.Z., Su, C.X., Hong, H.S., 2011. Nutrient sources and composition of recent algal blooms and eutrophication in the northern Jiulong River, Southeast China. Mar. Pollut. Bull. 63 (5–12), 249–254.
Liu, M.X., Shi, X.L., Chen, C., Yu, L., Sun, C., 2017. Responses of microcystis colonies of different sizes to hydrogen peroxide stress. Toxins 9 (10).
Ma, M., Liu, R.P., Liu, H.J., Qu, J.H., 2012. Chlorination of Microcystis aeruginosa suspension: cell lysis, toxin release and degradation. J. Hazard Mater. 217, 279–285.
Mahamuni, N.N., Adewuyi, Y.G., 2010. Advanced oxidation processes (AOPs) involving ultrasound for waste water treatment: a review with emphasis on cost estimation. Ultrason. Sonochem. 17 (6), 990–1003.
Moon, B.R., Kim, T.K., Kim, M.K., Choi, J., Zoh, K.D., 2017. Degradation mechanisms of Microcystin-LR during UV-B photolysis and UV/H2O2 processes: byproducts and pathways. Chemosphere 185, 1039–1047.
Naceradska, J., Pivokonsky, M., Pivokonska, L., Baresova, M., Henderson, R.K., Zamyadi, A., Janda, V., 2017. The impact of pre-oxidation with potassium permanganate on cyanobacterial organic matter removal by coagulation. Water Res. 114, 42–49.
Ou, H.S., Gao, N.Y., Deng, Y., Qiao, J.L., Zhang, K.J., Li, T., Dong, L., 2011. Mechanistic studies of Microcystic aeruginosa inactivation and degradation by UV-C irradiation and chlorination with poly-synchronous analyses. Desalination 272 (1–3), 107–119.
Park, J.A., Nam, H.L., Choi, J.W., Ha, J., Lee, S.H., 2017. Oxidation of geosmin and 2-methylisoborneol by the photo-Fenton process: kinetics, degradation intermediates, and the removal of microcystin-LR and trihalomethane from Nak-Dong River water, South Korea. Chem. Eng. J. 313, 345–354.
Qi, J., Lan, H., Miao, S., Xu, Q., Liu, R., Liu, H., Qu, J., 2016. KMnO4–Fe(II) pretreatment to enhance Microcystis aeruginosa removal by aluminum coagulation: does it work after long distance transportation? Water Res. 88, 127–134.
Roos, W.P., Thomas, A.D., Kaina, B., 2016. DNA damage and the balance between survival and death in cancer biology. Nat. Rev. Canc. 16 (1), 20–33.
Shukla, A., Trivedi, S.P., 2018. An in vitro analysis of the rat C6 glioma cells to elucidate the linear alkylbenzene sulfonate induced oxidative stress and consequent G2/M phase cell cycle arrest and cellular apoptosis. Chemosphere 205, 443–451.
Svrcek, C., Smith, D.W., 2004. Cyanobacteria toxins and the current state of knowledge on water treatment options: a review. J. Environ. Eng. Sci. 3 (3), 155–185.
Szczuka, A., Parker, K.M., Harvey, C., Hayes, E., Vengosh, A., Mitch, W.A., 2017. Regulated and unregulated halogenated disinfection byproduct formation from chlorination of saline groundwater. Water Res. 122, 633–644.
Triantis, T.M., Fotiou, T., Kaloudis, T., Kontos, A.G., Falaras, P., Dionysiou, D.D., Pelaez, M., Hiskia, A., 2012. Photocatalytic degradation and mineralization of microcystin-LR under UV-A, solar and visible light using nanostructured nitrogen doped TiO2. J. Hazard Mater. 211, 196–202.
USEPA, 1978. EPA Method 330.5: Chlorine, Total Residual (Spectrophotometric, DPD), EPA 600/4-79-020 Methods for Chemical Analysis of Water and Wastes, Revised March 1983 Environmental Protection Agency (USEPA).
USEPA, 1992. EPA Method 524.2: Measurement of Purgeable Organic Compounds in Water by Capillary Column Gas Chromatography/mass Spectrometry.
USEPA, 1993. EPA Method 300.1: Determination of Inorganic Anions in Drinking Water by Ion Chromatography.
USEPA, 1995. EPA Method 551.1: Determination of Chlorination Disinfection Byproducts, Chlorinated Solvents, and Halogenated Pesticides/herbicides in Drinking Water by Liquid-Liquid Extraction and Gas Chromatography with Electron-Capture Detection.
Werschkun, B., Sommer, Y., Banerji, S., 2012. Disinfection by-products in ballast water treatment: an evaluation of regulatory data. Water Res. 46 (16), 4884–4901.

Wert, E.C., Korak, J.A., Trenholm, R.A., Rosario-Ortiz, F.L., 2014. Effect of oxidant exposure on the release of intracellular microcystin, MIB, and geosmin from three cyanobacteria species. Water Res. 52, 251–259.
Wu, Z.L., Shen, H.F., Ondruschka, B., Zhang, Y.C., Wang, W.M., Bremner, D.H., 2012. Removal of blue-green algae using the hybrid method of hydrodynamic cavitation and ozonation. J. Hazard Mater. 235, 152–158.
Xue, R., Shi, H., Ma, Y., Yang, J., Hua, B., Inniss, E.C., Adams, C.D., Eichholz, T., 2017. Evaluation of thirteen haloacetic acids and ten trihalomethanes formation by peracetic acid and chlorine drinking water disinfection. Chemosphere 189, 349–356.
Zamyadi, A., Ho, L., Newcombe, G., Bustamante, H., Prevost, M., 2012a. Fate of toxic cyanobacterial cells and disinfection by-products formation after chlorination. Water Res. 46 (5), 1524–1535.
Zamyadi, A., MacLeod, S.L., Fan, Y., McQuaid, N., Dorner, S., Sauve, S., Prevost, M., 2012b. Toxic cyanobacterial breakthrough and accumulation in a drinking water plant: a monitoring and treatment challenge. Water Res. 46 (5), 1511–1523.
Zhang, W.H., Zhang, D., Zhang, R.J., Xia, F., Liu, Y.F., 2012. Flow injection analysis of volatile phenols in environmental water samples using CdTe/ZnSe nanocrystals as a fluorescent probe. Anal. Bioanal. Chem. 402 (2), 895–901.
Zhang, X.J., Chen, C., Ding, J.Q., Hou, A.X., Li, Y., Niu, Z.B., Su, X.Y., Xu, Y.J., Laws, E.A., 2010. The 2007 water crisis in Wuxi, China: analysis of the origin. J. Hazard Mater. 182 (1–3), 130–135.
Zhang, Y., Tian, Y., Zhang, Z., Lin, S., 2018. Experimental and numerical study of cavitating flow with suction in a mixing reactor for water treatment. Chem. Eng. J. 353, 796–804.
Zong, W.S., Sun, F., Sun, X.J., 2013. Evaluation on the generative mechanism and biological toxicity of microcystin-LR disinfection by-products formed by chlorination. J. Hazard Mater. 252, 293–299.